Spare part price list 2024

Nursing care bed adi.flex 220

Art.No. 267 A…

Kindly mention the serial number of the bed on our spare part order.

Subject to technical modification

In case of any future global impacts, we reserve the right to implement further price adjustments in the course of this year.

Prices presumably valid up to the 31.12.2024

Issued: 01/2024

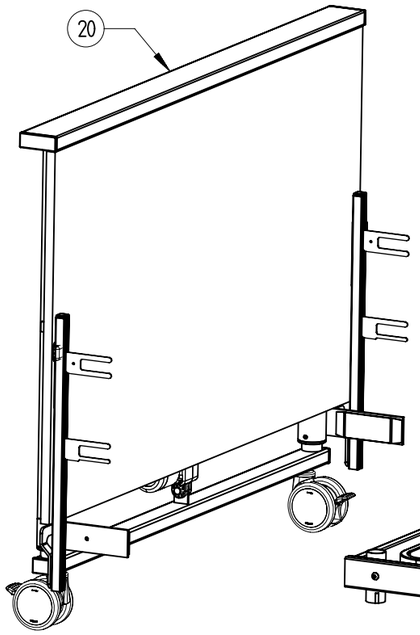

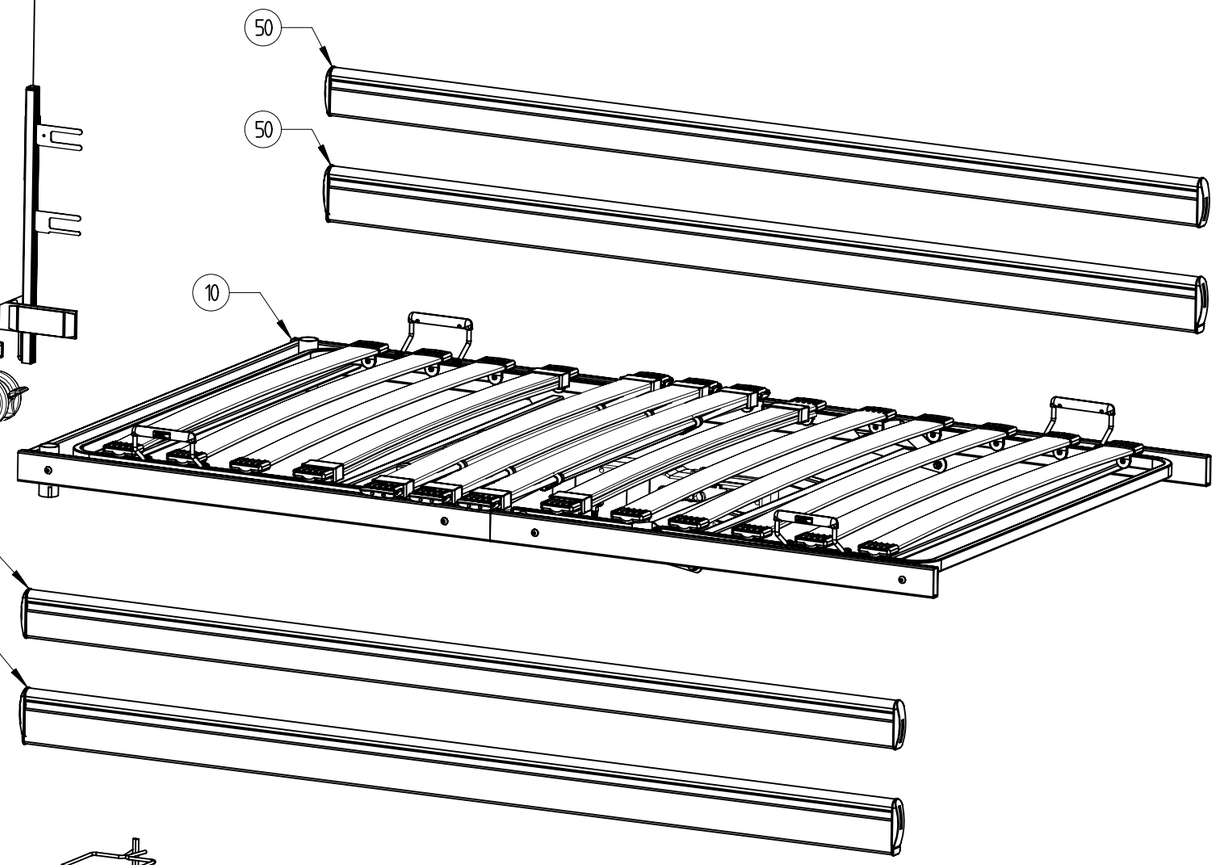

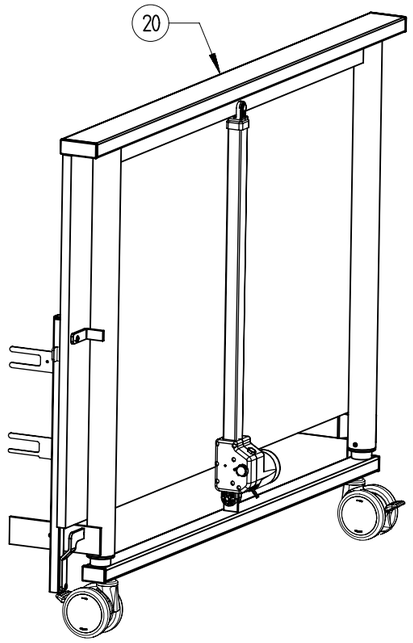

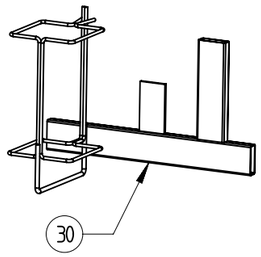

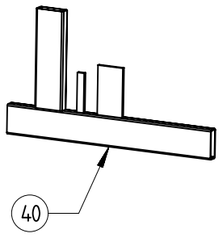

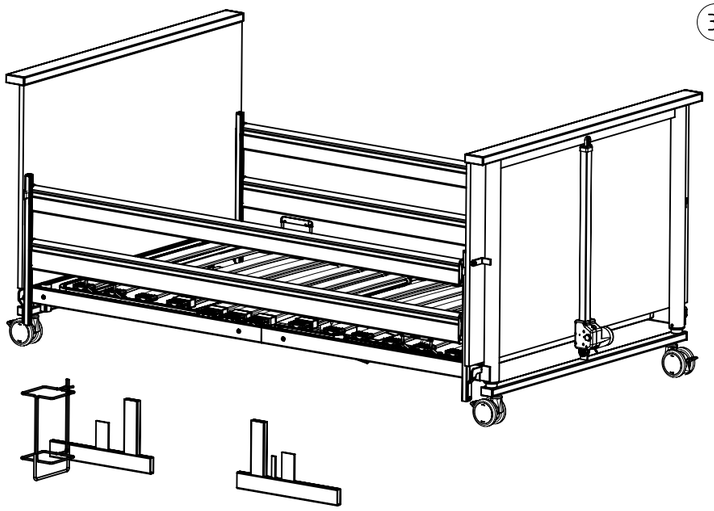

Mantelfläche (cm²)			226848.67	Zul.Abw. DIN ISO 2768-1 Mittel	Massstab 1 : 10 ISO-E
Querschnitt (mm²) / Gewicht/m (kg)				Oberfl. Pulverb.	Werkstoff S235 JR
Volumen (cm³) / Gewicht (g)			95544.61 / 224987.26		Benennung BG-Bett-adiflex-120x200
A	03.05.2013	bauer			In Bearbeitung
Index	Datum	Name	Änderung		Verwendungsbereich Spezialbetten
geprüft	00-Jan-0			.bock /// Hermann Bock GmbH Nickelstrasse 12, D-33415 Verl www.bock.net fon +049 52469205 0 gm@bock.net fax +049 52469205 25	Zeichnungsnummer 012239 A
erstellt	03.05.2013	Evgenij Bauer			Fertigteilnummer 267
	Datum	Name			Rohteilnummer

A3

No.	Art.-no.	Description	EAN Codes	
		Nursing care bed adi.flex 220 - colour Sonoma		
10	91538 A001	Lying surface adi.flex 660 120x200 cm without motors	4054129026362	
	91538 A002	Lying surface adi.flex 660 120x220 cm without motors	4054129048524	
	91538 A009	Lying surface adi.flex 660 100x200 cm without motors	4054129048531	
	91538 A010	Lying surface adi.flex 660 100x220 cm without motors	4054129048548	
20	91547 A003	End panel with motor 120 cm	4054129058967	
	91547 A005	End panel with motor 100 cm	4054129058950	
30	920.04058	Transport system fitting big, alu	4054129029073	
40	920.04059	Transport system fitting small, alu	4054129029097	
50	91246 A012	Set wooden side rail domi1/adif. 95/110 200 cm	4054129058936	
	91246 A015	Set wooden side rail domi1/adif. 95/110 220 cm	4054129058974	

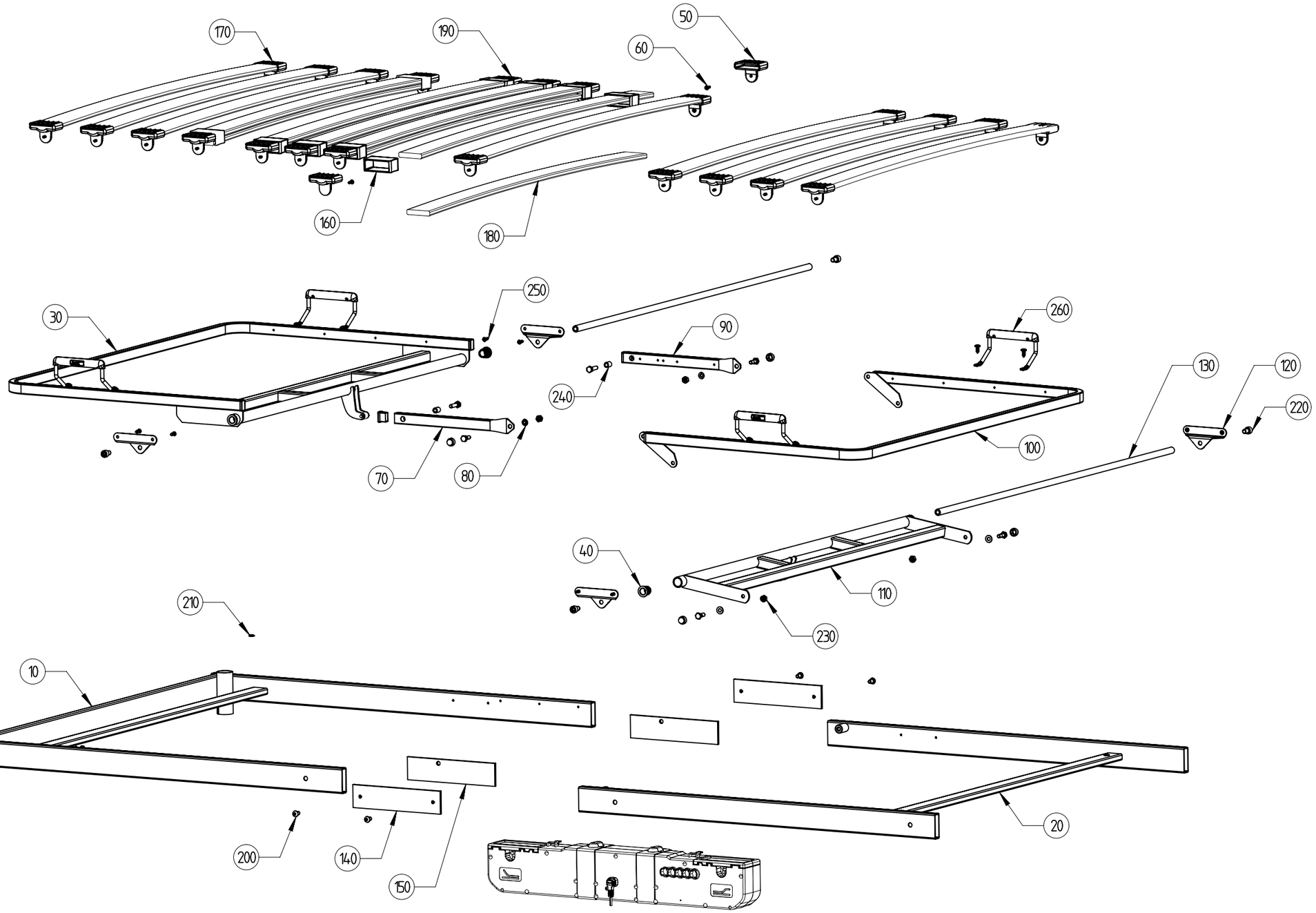

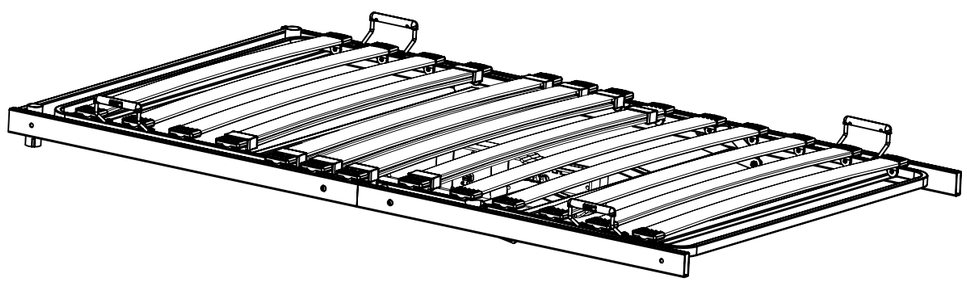

Mantelfläche (cm²)			105369.16		ZulAbw. DIN ISO 2768-1 Mittel
Querschnitt (mm²) / Gewicht/m (kg)					Oberfl. Pulverb.
Volumen (cm³) / Gewicht (g)			32119.31	118726.03	
A	03.05.2013	bauer			
B	08.05.2013	bauer			
C	15.05.2017	woeste			
Index	Datum	Name	Änderung		
geprüft	00-Jan-0				
erstellt	15.05.2017	Christoph Woeste			
	Datum	Name			

.bock
Hermann Bock GmbH
Nikolaistrasse 12 D-33415 Verl
www.bock.net fon +049 52469205 0
gm@bock.net fax +049 52469205 25

Massstab	1 : 10	ISO-E
Werkstoff	120x200	
Benennung	BG-Liegeflaeche-adiflex-120er	
	In Bearbeitung	
Verwendungsbereich	adiflex 120x200	
Zeichnungsnummer	012219	C
Fertigteilnummer	91538	
Rohteilnummer		

A3

No.	Art.-no.	Description	EAN Codes	
		Lying surface		
10	91539 A001	Frame adilex head part 120 cm	4054129033223	
	91539 A002	Frame adilex head part 100 cm	4054129048562	
20	91540 A001	Frame foot part pluggable 120 x 200 cm	4054129033186	
	91540 A002	Frame foot part pluggable 120 x 220 cm	4054129033193	
	91540 A004	Frame foot part pluggable 100x200 cm	4054129048579	
	91540 A006	Frame foot part pluggable 100x220 cm	4054129048586	
30	91544 A001	Head bar adiflex 660, perpoared for wooden slats 120 cm	4054129014840	
	91544 A002	Head bar adiflex 660, perpoared for wooden slats 100 cm	4054129048593	
40	830.00231	Plain bearing bush, with collar	4054129008160	
50	890.01965	Moulded rubber part, grey	4054129000980	
60	700.00815	Metal screw 4,8x16	4054129017216	
70	92331 A001	AG middle part, wooden slats - 120 cm	4054129032059	
	92103 A001	Middle part lying surface, left side,ws -100 cm	4054129030697	
80	890.02602	Plain bearing MU TFF 8,2 10,2 4	4054129069895	
90	92331 A001	AG middle part, wooden slats - 120 cm	4054129032059	
	92104 A001	Middle part lying surface, right side,ws - 100 cm	4054129032042	
100	90017 A048	Foot bar adiflex,perpared for wooden slats -120x200 cm	4054129032240	
	90017 A051	Foot bar adiflex,perpared for wooden slats -120x220 cm	4054129018428	
	90017 A046	Foot bar adiflex,perpared for wooden slats -100x200 cm	4054129032165	
	90017 A042	Foot bar adiflex,perpared for wooden slats -100x220 cm	4054129039072	
110	91546 A001	Foot bar actuator adiflex 120 cm	4054129014857	
	920.04592	Set foot bar actutor for adi.flex as replacement for 91546 A001	4054129045806	
	91546 A002	Foot bar actuator adiflex 100 cm	4054129058981	
	920.04605	Set foot bar actutor for adi.flex as replacement for 91546 A002	4054129048647	
120	920.04070	Fixation foot bar actuator without bolt	4054129014871	
130	910.08326	Inner tube adiflex 120 cm	4054129014888	
	910.09052	Inner tube adiflex 100 cm	4054129048609	
140	910.08290	Connector frame	4054129033216	
150	910.08291	Connector frame, 1x perforated	4054129033209	
160	890.01975	Slider for tension ge regulation 65/25 mm grey	4054129045233	
170	91668 A001	Wooden slat 120cm width inner life 12mm	4054129014550	

	91668 A009	Wooden slat 100 cm width inner life 12mm	4054129048678	
180	91670 A001	Wooden slat for tension regulation 12mm 120 cm width	4054129032875	
	91670 A009	Wooden slat for tension regulation 12mm 100 cm width	4054129048661	
190	91672 A002	Wooden slat for middle slat -120 cm width	4054129045202	
	91672 A001	Wooden slat for middle slat -100 cm width	4054129017155	
200	700.00739	Fillister head screw M8x14, galvanised	4054129000584	
210	830.00668	Cover plug black	4054129070877	
220	700.00564	Cylinder head screw M 10x16	4054129043239	
230	700.00446	Stop nut M 8	4054129018497	
240	609.00017	Bush D=12x15,5	4054129018473	
250	700.00977	Metal screw 5,5x16, Filister head	4054129016561	
260	890.02501	Mattress bracket, screwable from above	4054129050008	

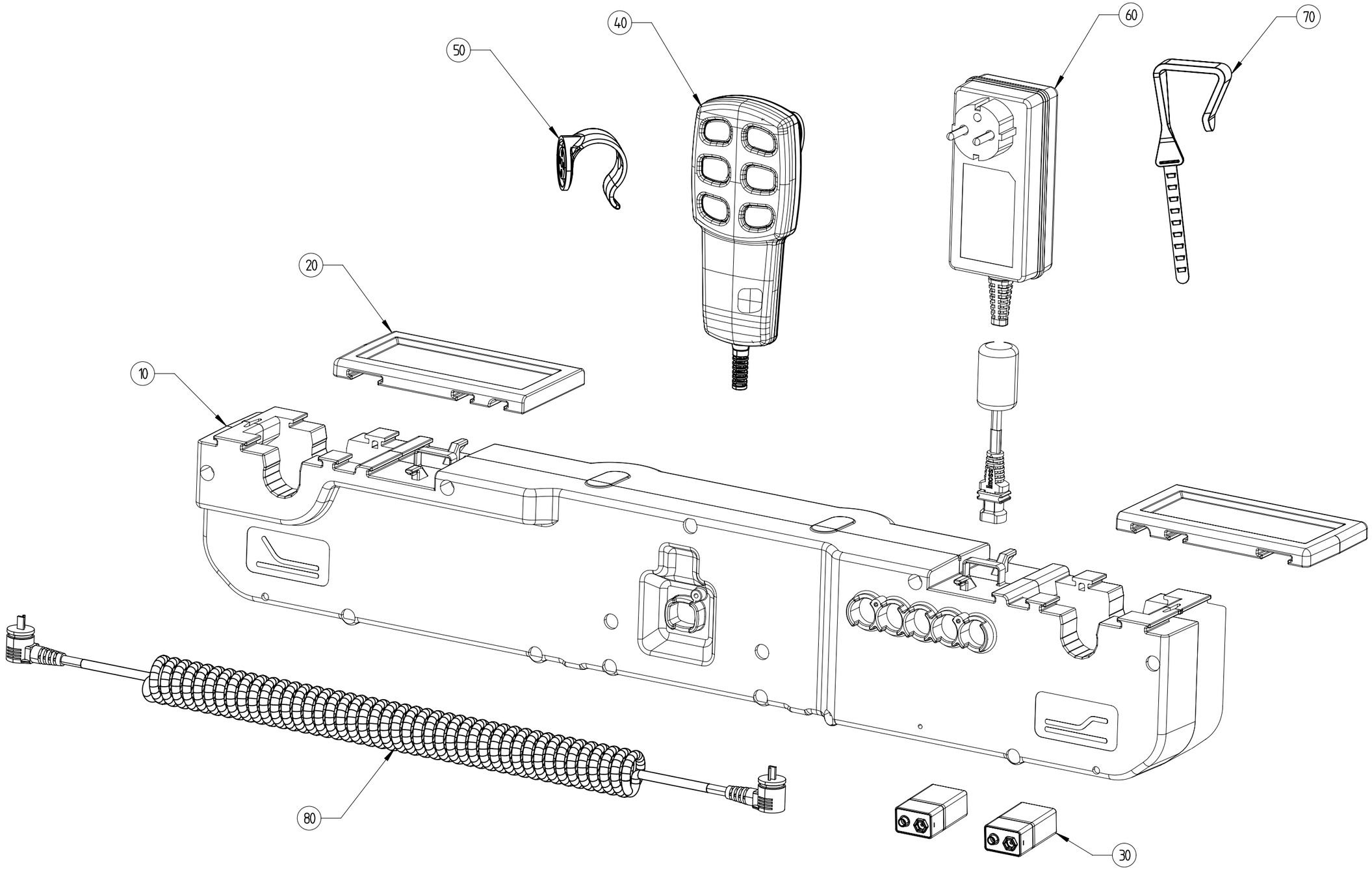

Mantelfläche (cm²)			941.032		Zul.Abw. DIN ISO 2768-1 Mittel	Massstab 1 : 2 ISO-E
Querschnitt (mm²) / Gewicht/m (kg)					Oberfl. erodiert VDI3400-33	Werkstoff Kunststoff
Volumen (cm³) / Gewicht (g)			434.580	3.403.039		
						Benennung Antriebsset-MD201-6-Tasten
						In Bearbeitung
A	10.10.2019	brouwers				
Index	Datum	Name	Änderung			Verwendungsbereich Antriebsset Limoss
geprüft					.bock /// Hermann Bock GmbH Nickelstrasse 12, D-33415 Verl www.bock.net fon +049 52469205 0 gm@bock.net fax +049 52469205525	Zeichnungsnummer 018349 A
erstellt	10.10.2019	Christoph Brouwers				Fertigteilnummer 91871
	Datum	Name				Rohteilnummer

A3

No.	Art.-no.	Description	EAN Codes	
	91871A001	**Motor Set**	4054129012013	
10	800.00563	Main motor limoss 2+2 direct, 2014	4054129008061	
20	800.00510	Holding sheet for main motor MD200Limoss	4054129000850	
30	206.00395	Battery 9 Vfor main motor	4054129006920	
40	800.00581	Hand set Bock (limoss) 7 buttons	4054129009013	
50	890.01362	Hand set -clip .bock, silver-grey	4054129001765	
60	800.00454	SMPS plug Euro plug	4054129000867	
70	800.00099	Net cable attachment	4054129000874	
80	800.00524	Motor cable MD200/201	4054129011405	

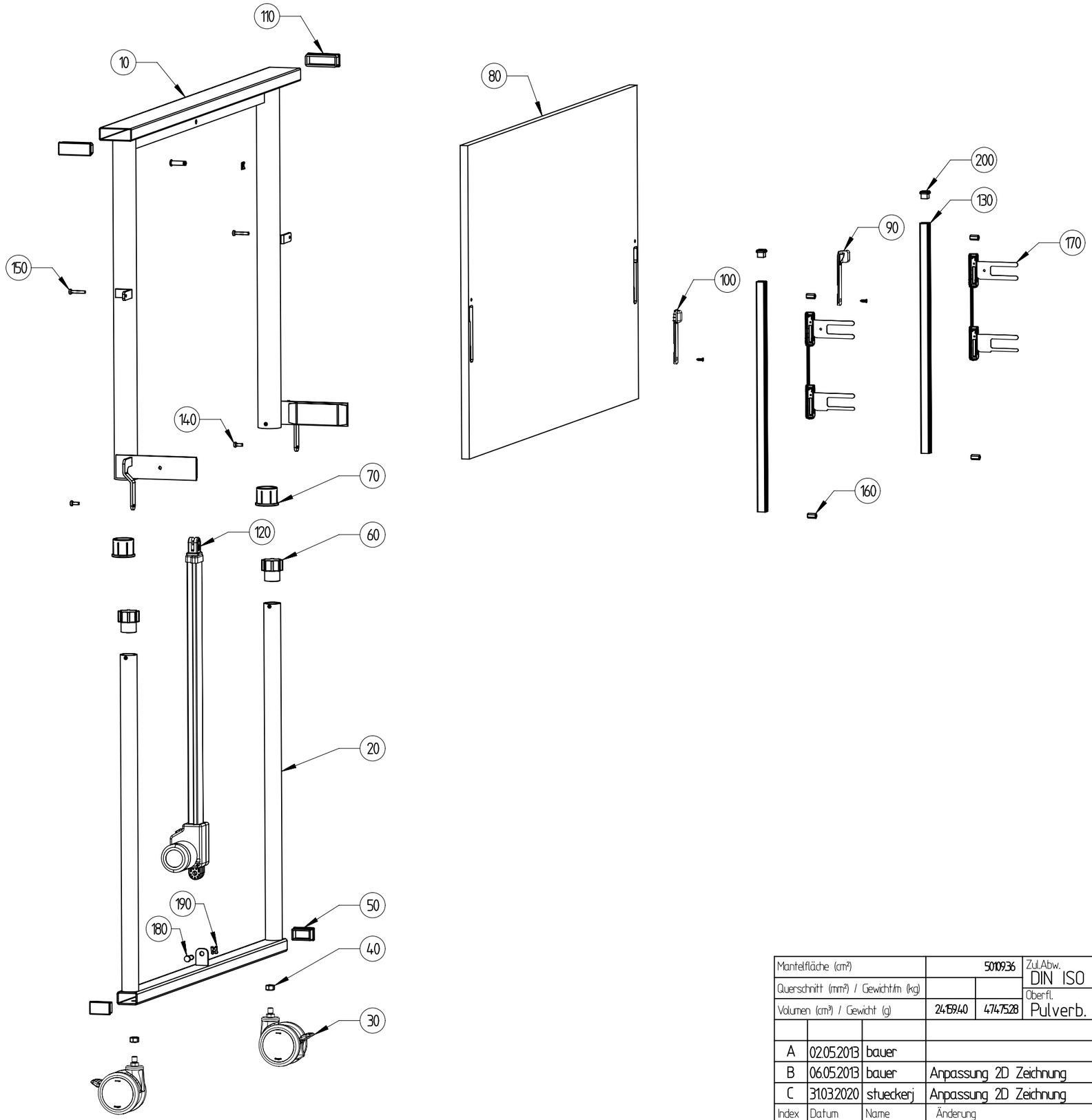

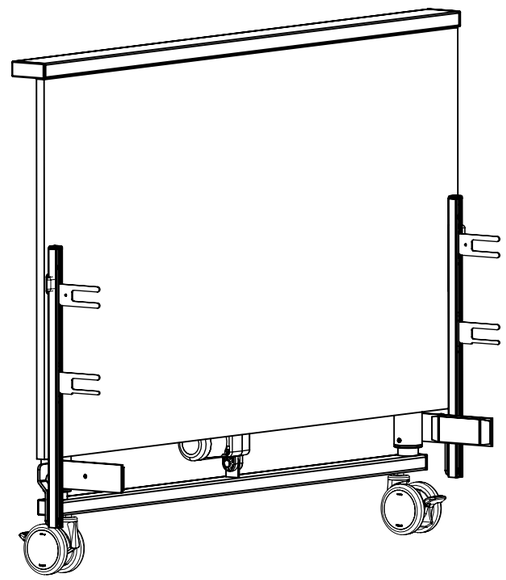

Mantelfläche (cm²)			5010936		Zul.Abw. DIN ISO 2768-1 Mittel	Massstab 1 : 10 ISO-E
Querschnitt (mm²) / Gewicht/m (kg)					Oberfl. Pulverb.	Werkstoff S235 JR
Volumen (cm³) / Gewicht (g)			24159.40	47475.28		
						Benennung
A	02.05.2013	bauer				BG-Endstueck-adiflex-120er
B	06.05.2013	bauer	Anpassung 2D Zeichnung			
C	31.03.2020	stueckerj	Anpassung 2D Zeichnung			In Bearbeitung
Index	Datum	Name	Änderung			Verwendungsbereich adiflex
geprüft	00-Jan-0				.bock /// Hermann Bock GmbH Nickelstrasse 12, D-33415 Verl www.bock.net fon +049 52469205 0 gm@bock.net fax +049 52469205 25	Zeichnungsnummer 012205 C
erstellt	31.03.2020	Henri Stueckerjuergen				Fertigteilnummer 91547
	Datum	Name				Rohteilnummer

A3

No.	Art.-no.	Description	EAN Codes	
		End panel		
10	91548 A001	Top end panel 120 cm	4054129033247	
	91548 A002	Top end panel 100 cm	4054129048616	
20	91549 A001	Lower Part 120 cm	4054129030130	
	91549 A002	Lower Part 100 cm	4054129048623	
30	820.00007	Castor 4.R460.DMA0, Serie 551	4054129026959	
40	700.00447	Stop nut M 12	4054129045219	
50	830.00411	Cover plug 50x30x3 grey	4054129030550	
60	830.00017	Plastic infill valeo.flex	4054129045226	
70	830.00019	Plastic bush verona and valeoflex	4054129013027	
80	810.00677	End panel adiflex 220kg 120 cm	4054129059094	
	810.00738	End panel adiflex 220kg 100 cm	4054129060113	
90	830.00628	Trip lever for side rail right, alu	4054129045417	
100	830.00629	Trip lever for side rail left, alu	4054129045462	
110	830.00226	Cover plug 80x30 grey	4054129017469	
120	800.00838	Actuator adi.flex limoss	4054129054587	
130	90158 A002	Side rail bar 550 mm, powder coated	4054129007637	
140	700.00169	Filister head screw M 6x16	4054129001567	
150	700.00603	Filister head screw M 6x35	4054129011948	
160	750.00064	Distance piece 6Kt. M 6x20	4054129001574	
170	920.02706	Side rail fitting, standard, mounted	4054129000249	
180	703.00093	Bolt with nut 10/30,8/37	4054129009730	
190	700.00681	Bolt lock SL 10 mm	4054129007392	
200	890.01287	Plug 20x20	4054129004032	