Spare part price list 2024

Nursing care bed belluno

Art.No. 281 A…

Kindly mention the serial number of the bed on our spare part order.

Subject to technical modification

In case of any future global impacts, we reserve the right to implement further price adjustments in the course of this year.

Prices valid presumably up to the 31.12.2024

Issued: 01/2024

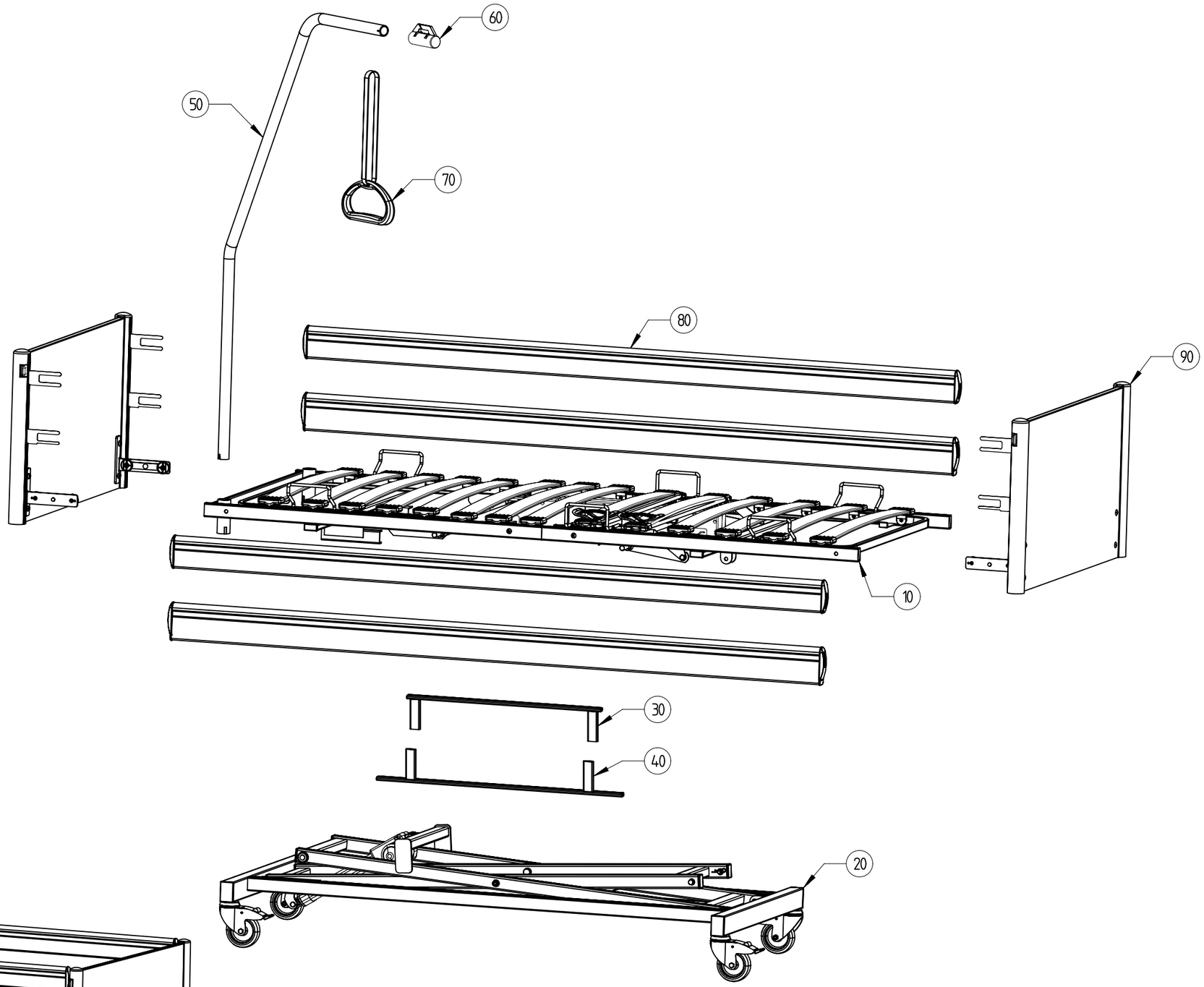

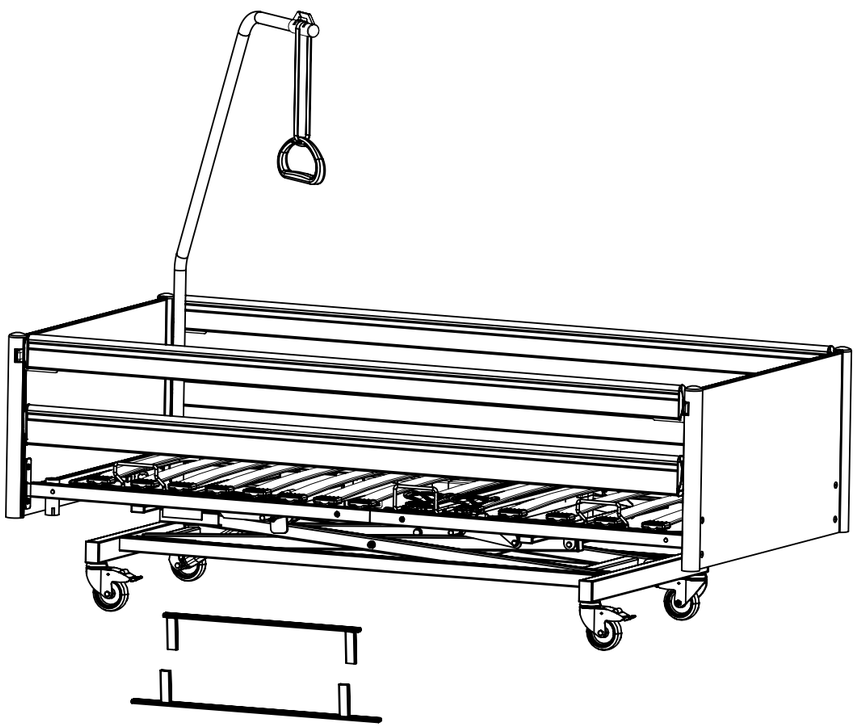

Mantelfläche (cm²)			16461951		ZulAbw. DIN ISO 2768-1 Mittel	Massstab 1 : 10 ISO-E
Querschnitt (mm²) / Gewicht/m (kg)					Oberfl. Pulverb.	Werkstoff 90x200
Volumen (cm³) / Gewicht (g)			6645050	30442959		
						Benennung BG-Bett-belluno-Mod.2012
A	10.12.2012	bauer				In Bearbeitung
B	28.01.2020	stueckerj				
Index	Datum	Name	Änderung			Verwendungsbereich Homecare
geprüft	00-Jan-0				.bock Hermann Bock GmbH Nikolaistrasse 12 D-33415 Verl www.bock.net fon +049 52469205 0 gm@bock.net fax +049 52469205 25	Zeichnungsnummer 011888 B
erstellt	28.01.2020	Henri Stueckerjuergen				Fertigteilnummer 281
	Datum	Name				Rohteilnummer

A3

No.	Article code	Description	Colour	EAN Codes	
		Nursing care bed belluno with mattress compensation			
		90x200	110x180		
		90x210	110x200		
		100x200	120x200- with 2 main motors		
10	91360 A047	Lying surface belluno with motor 90x200		4054129030840	
	91360 A155	Lying surface belluno with motor 90x210		4054129044731	
	91360 A156	Lying surface belluno with motor 100x200		4054129044748	
	91360 A154	Lying surface belluno with motor 110x180		4054129044755	
	91360 A025	Lying surface belluno with motor 110x200		4054129030932	
	91360 A157	Lying surface belluno with motor 120x200		4054129044762	
20	91327 A005	Base belluno 2012 up to 100 cm		4054129044779	
	91441 A004	Base belluno 2012 - wide used from a width of 110 cm		4054129031120	
30	920.04733	Transport set - button and top		4054129072086	
40		Only one component nowadays			
50	92228 A001	Lifting pole with triangle grip		4054129019555	
60	830.00181	Cover cap for lifting pole 38x110		4054129043314	
70	890.01848	Triangle grip for lifting pole, grey		4054129000737	
80	91247A001	Set wooden side rails belluno 95/110, 200 cm	Havana	4054129011818	
	91247A010	Set wooden side rails belluno 95/110, 210 cm	Havana	4054129030376	
	91247A003	Set wooden side rails belluno 95/110, 200 cm	Beech	4054129002694	
	91247A013	Set wooden side rails belluno 95/110, 210 cm	Beech	4054129031229	
	91247 A094	Set wooden side rails belluno 95/110, 200 cm	Sonoma Oak	4054129055317	
	91247 A115	Set wooden side rails belluno 95/110, 210 cm	Sonoma Oak	4054129055355	
	80350A002	Pair side rail, standard 110 mm up+down, 200 cm	Havana	4054129010354	
	80350A003	Pair side rail, standard 110 mm up+down, 210 cm	Havana	4054129031175	
	80350A001	Pair side rail, standard 110 mm up+down, 200 cm	Beech	4054129007132	
	80350A006	Pair side rail, standard 110 mm up+down, 210 cm	Beech	4054129031182	
	80350 A014	Pair side rail, standard 110 mm up+down, 200 cm	Sonoma Oak	4054129055324	
	80350 A015	Pair side rail, standard 110 mm up+down, 210 cm	Sonoma Oak	4054129055362	
90	90473A052	Set end panel belluno, packed 90 cm	Havana	4054129011375	
	90473A053	Set end panel belluno, packed 100 cm	Havana	4054129031335	
	90473A060	Set end panel belluno, packed 110 cm	Havana	4054129029387	

	90473A054	Set end panel belluno, packed 120 cm	Havana	4054129031342	
	90473A001	Set end panel belluno, packed 90 cm	Beech	4054129003578	
	90473A002	Set end panel belluno, packed 100 cm	Beech	4054129010941	
	90473A011	Set end panel belluno, packed 110 cm	Beech	4054129031373	
	90473A004	Set end panel belluno, packed 120 cm	Beech	4054129003851	
	90473A110	Set end panel belluno, packed 90 cm	Sonoma Oak	4054129055331	
	90473A117	Set end panel belluno, packed 100 cm	Sonoma Oak	4054129055379	
	90473A157	Set end panel belluno, packed 110 cm	Sonoma Oak	4054129055386	
	90473A121	Set end panel belluno, packed 120 cm	Sonoma Oak	4054129055393	
	90472A023	End panel belluno with fittings, type 8, 90 cm	Havana	4054129024047	
	90472A025	End panel belluno with fittings, type 8, 100 cm	Havana	4054129031243	
	90472A026	End panel belluno with fittings, type 8, 110 cm	Havana	4054129029295	
	90472A027	End panel belluno with fittings, type 8, 120 cm	Havana	4054129031250	
	90472A001	End panel belluno with fittings, type 8, 90 cm	Beech	4054129004094	
	90472A002	End panel belluno with fittings, type 8, 100 cm	Beech	4054129031298	
	90472A013	End panel belluno with fittings, type 8, 110 cm	Beech	4054129031304	
	90472A004	End panel belluno with fittings, type 8, 120 cm	Beech	4054129019340	
	90472A051	End panel belluno with fittings, type 8, 90 cm	Sonoma Oak	4054129055348	
	90472A060	End panel belluno with fittings, type 8, 100 cm	Sonoma Oak	4054129055409	
	90472A061	End panel belluno with fittings, type 8, 110 cm	Sonoma Oak	4054129055416	
	90472A062	End panel belluno with fittings, type 8, 120 cm	Sonoma Oak	4054129055423	

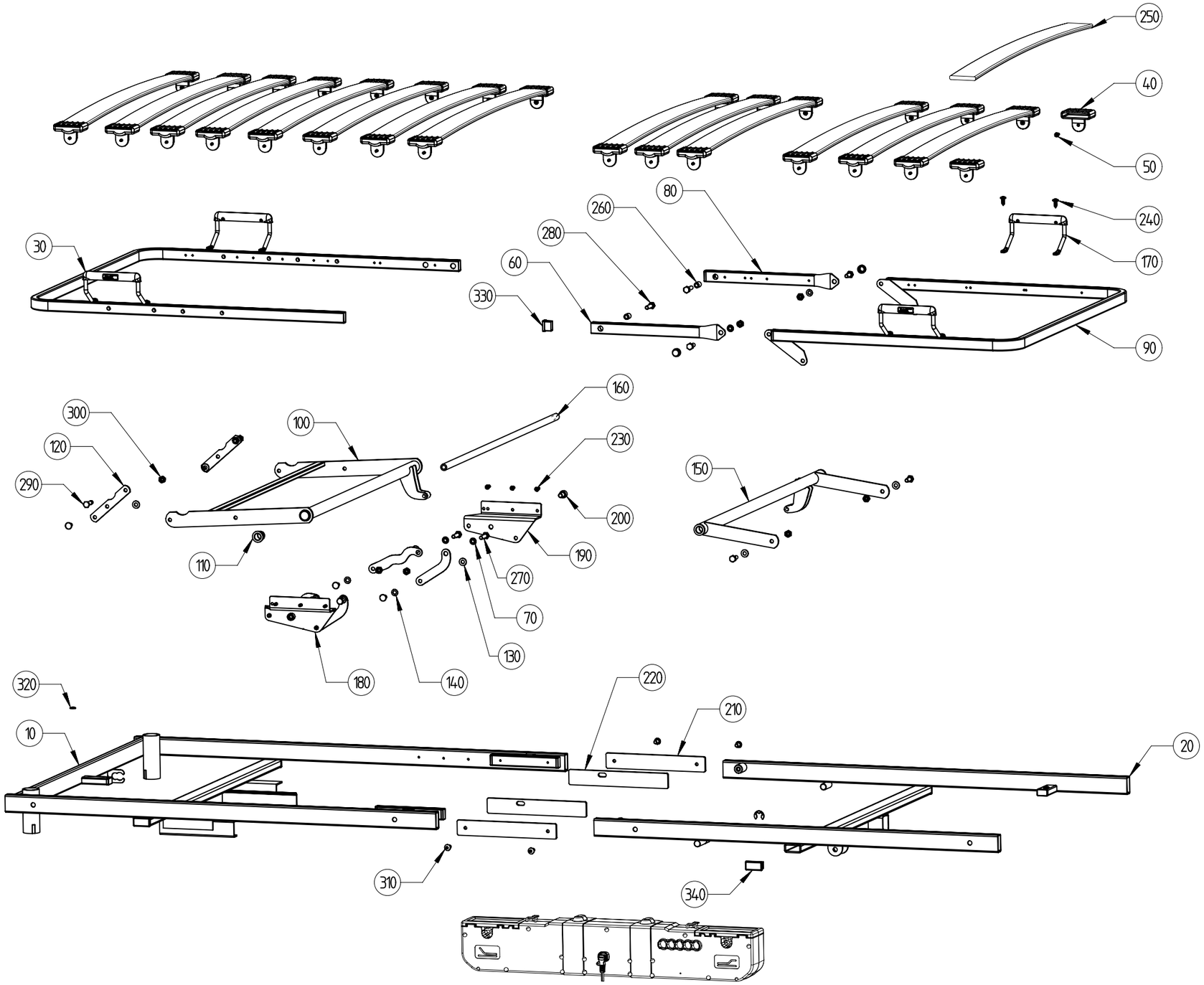

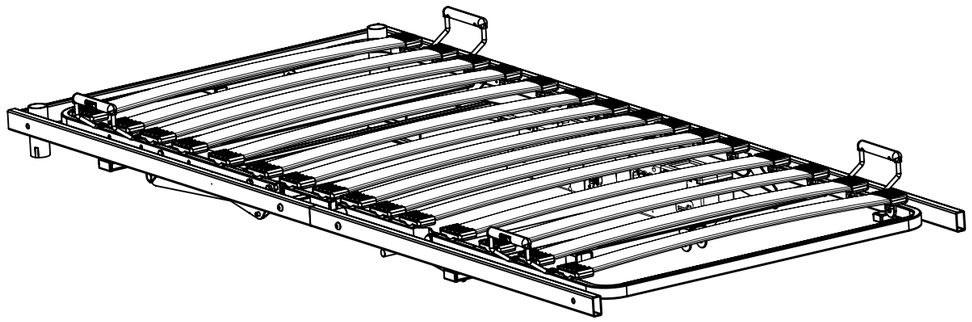

Mantelfläche (cm²)			6196.23	ZulAbw. DIN ISO 2768-1|Mittel	Massstab 1 : 1 ISO-E
Querschnitt (mm²) / Gewicht/m (kg)				Oberfl. Pulverb.	Werkstoff m.Matratzenausgleich
Volumen (cm³) / Gewicht (g)			1599.90 / 72496.13		
					Benennung BG-Liegeflaeche-belluno.m.MA-Mod.2012
A	26.02.2013	bauer			In Bearbeitung
B	01.04.2020	stueckerj			
Index	Datum	Name	Änderung		Verwendungsbereich Belluno m. MA Mod. 2012-2013
geprüft				.bock Hermann Bock GmbH Nikolaistrasse 12 D-33415 Verl www.bock.net fon +049 52469205 0 gm@bock.net fax +049 52469205 25	Zeichnungsnummer 012126 B
erstellt	01.04.2020	Henri Stueckerjuergen			Fertigteilnummer 91360
	Datum	Name			Rohteilnummer

A3

No.	Article code	Description	Colour	EAN Codes	
		Lying surface			
10	91347 A001	Frame belluno head part 775-2012, 90 cm		4054129031885	
	91347 A002	Frame belluno head part 775-2012, 100 cm		4054129031892	
	91347 A007	Frame belluno head part 775-2012, 110 cm		4054129031908	
	91347 A003	Frame belluno head part 775-2012, 120 cm		4054129031915	
20	91348 A001	Frame belluno foot part,200 cm		4054129021831	
	91348 A005	Frame belluno foot part,210 cm		4054129031618	
30	92114 A001	Head bar 775, version 2016 ,90 cm		4054129025990	
	92114 A002	Head bar 775, version 2016 ,100 cm		4054129018077	
	92114 A008	Head bar 775, version 2016 , 110 cm		4054129031984	
	92114 A003	Head bar 775, version 2016 ,120 cm		4054129031991	
40	890.01965	Moulded rubber part, grey		4054129000980	
50	700.00815	Metal screw 4,8x16		4054129017216	
60	92103 A001	Middle part lying surface, left side,ws, 90,100,110 cm		4054129030697	
	92331 A001	Middle part lying surface 120 cm left & right		4054129032059	
70	890.02602	Plain bearing MU TFF 8,2 10,2 4		4054129069895	
80	92104 A001	Middle part lying surface, right side,ws, 90 cm,100,110 cm		4054129032042	
90	90017 A040	Foot bar, perpared for wooden slats 90 x 200 cm		4054129003905	
	90017 A049	Foot bar, perpared for wooden slats 90 x 210 cm		4054129029561	
	90017 A046	Foot bar, perpared for wooden slats 100 x 200 cm		4054129032165	
	90017 A104	Foot bar, perpared for wooden slats 110x180 cm		4054129032189	
	90017 A048	Foot bar, perpared for wooden slats 120x200 cm		4054129032240	
100	91641 A001	Head bar actuator, model 2014, MA, 90 cm		4054129009648	
	91641 A002	Head bar actuator, model 2014, MA, 100 cm		4054129008511	
	91641 A003	Head bar actuator, model 2014, MA, 110 cm		4054129031953	
	92274 A001	Head bar actuator, model 2014, MA, 120 cm for 2 main motors		4054129032806	
110	830.00231	Plain bearing bush, with collar		4054129008160	
120	910.08399	Connection tab		4054129043444	
130	830.00547	Felt washer PP 8,4x17x2		4054129022050	
140	700.00924	Felt washer PP 8,4x17x2		4054129043352	
150	91343 A001	Foot bar actuator 2012, pluggable 90 cm +100 cm		4054129002748	
	91343 A007	Foot bar actuator 2012, pluggable 110 cm		4054129032349	

	91343 A005	Foot bar actuator 2012, pluggable 120 cm		4054129032356	
160	90262 A005	Inner tube actuator for MA 90 cm		4054129013850	
	90262 A009	Inner tube actuator for MA 100 cm		4054129016653	
	90262 A003	Inner tube actuator for MA 110 cm		4054129044786	
	90262 A002	Inner tube actuator for MA 120 cm		4054129015106	
170	890.02501	Mattress bracket, screwable from above		4054129050008	
180	611.00023	Mattress compensation 2015, Left		4054129015021	
190	611.00024	Mattress compensation 2015, Right		4054129015038	
200	700.00564	Cylinder head screw M 10x16		4054129043239	
210	910.02643	Joining bar for lying suface belluno		4054129010712	
220	910.02642	Joining bar for lying surface belluno		4054129010729	
230	700.00977	Sheet metal screw 5,5x16		4054129016561	
240	700.00986	Sheet metal screw 6.3x16		4054129030680	
250	91667 A001	Wooden slat 9mm for 90 cm		4054129011399	
	91667 A002	Wooden slat 9mm for 100 cm		4054129018862	
	91668 A003	Wooden slat 9mm for 110 cm		4054129032097	
	91668 A001	Wooden slat 9mm for 120 cm		4054129014550	
260	609.00017	Bush D=12x15,5		4054129018473	
270	700.00242	Hexagon head screw M 8x30		4054129018480	
280	700.00239	Hexagonal head screw with collar M8x22		4054129028113	
290	700.00660	Pivot screw SW13 8x32(35) M8x10		4054129030673	
300	700.00446	Stop nut M 8		4054129018497	
310	700.00678	Fillister head screw with collar M6x16		4054129011269	
320	830.00668	Cover plug black		4054129070877	
130	830.00547	Felt washer PP 8,4x17x2		4054129022050	
330	890.00999	Cover plug 25x15 grey		4054129025228	
340	830.00269	Cover plug 40x20x3 grey		4054129003233	

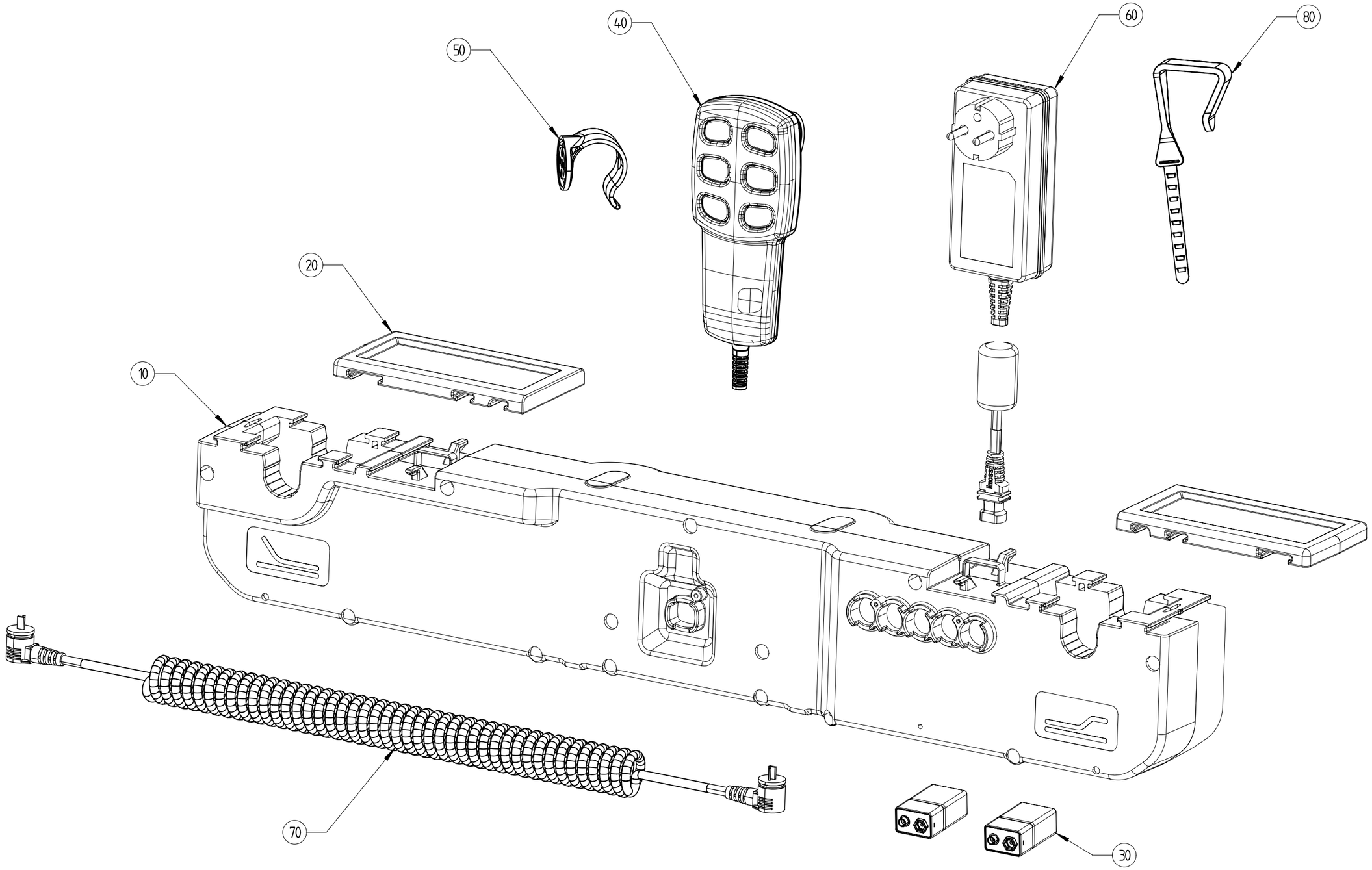

Mantelfläche (cm²)			9410.32		Zul.Abw. DIN ISO 2768-1 Mittel	Massstab 1 : 2 ISO-E
Querschnitt (mm²) / Gewicht/m (kg)					Oberfl. erodiert VDI3400-33	Werkstoff Kunststoff
Volumen (cm³) / Gewicht (g)			434.580	3403.039		
						Benennung Antriebsset-MD201
						In Bearbeitung
A	10.10.2019	brouwers				
Index	Datum	Name	Änderung			Verwendungsbereich Antriebsset Limoss
geprüft					.bock /// Hermann Bock GmbH Nikkelstrasse 12, D-33415 Verl www.bock.net fon +049 52469205 0 gm@bock.net fax +049 52469205525	Zeichnungsnummer 018349 A
erstellt	10.10.2019	Christoph Brouwers				Fertigteilnummer 91871
	Datum	Name				Rohteilnummer

A3

No.	Article code	Description	Colour	EAN Codes	
	91871A001	**Motor Set**		4054129012013	
10	800.00563	Main motor limoss 2+2 direct, 2014		4054129008061	
20	800.00510	Holding sheet for main motor MD200Limoss		4054129000850	
30	206.00395	Battery 9 Vfor main motor		4054129006920	
40	800.00581	Hand set Bock (limoss) 7 buttons		4054129009013	
50	890.01362	Hand set -clip .bock, silver-grey		4054129001765	
	800.00138	Joint ring for single drives/hand sets		4054129006340	
60	800.00454	SMPS plug Euro plug		4054129000867	
70	800.00524	Motor cable MD200/201		4054129011405	
80	800.00099	Net cable attachment		4054129000874	

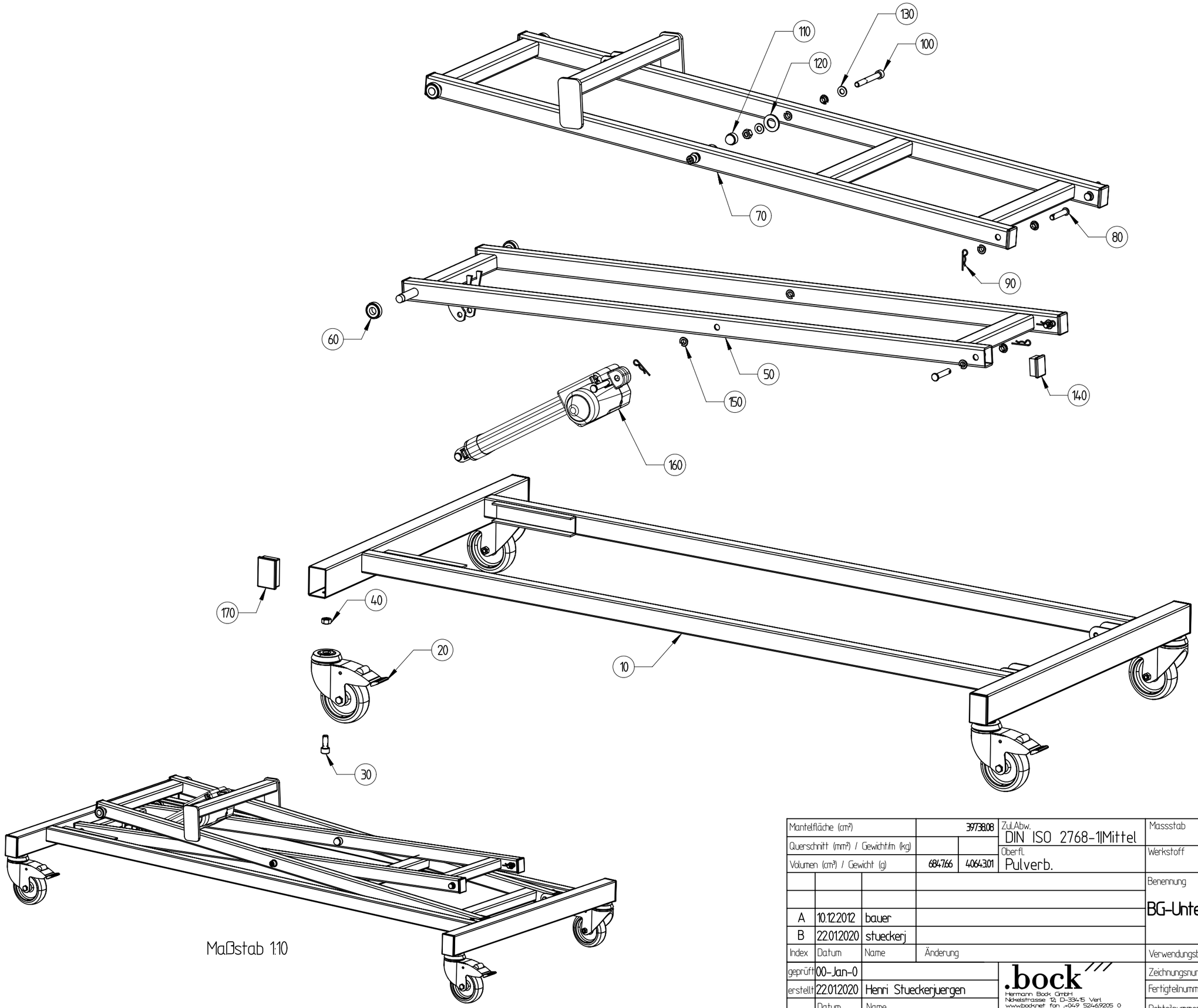

Mantelfläche (cm²)			39738.08	ZulAbw. DIN ISO 2768-1|Mittel	Massstab 1 : 7 ISO-E
Querschnitt (mm²) / Gewicht/m (kg)				Oberfl. Pulverb.	Werkstoff Untergestell bis 100er Bettb.
Volumen (cm³) / Gewicht (g)			6847.66 4064.301		
					Benennung
					BG-Untergestell-belluno-Mod.2012
A	10.12.2012	bauer			In Bearbeitung
B	22.01.2020	stueckerj			
Index	Datum	Name	Änderung		Verwendungsbereich Belluno Mod.2012
geprüft	00-Jan-0			.bock Hermann Bock GmbH Nikelstrasse 12, D-33415 Verl www.bock.net fon +049 52469205 0 gm@bock.net fax +049 5246920525	Zeichnungsnummer 011875 B
erstellt	22.01.2020	Henri Stueckerjuergen			Fertigteilnummer 91327
	Datum	Name			Rohteilnummer

A3

No.	Article code	Description	Colour	EAN Codes	
		Base			
10	91324 A001	Underframe belluno/bibs 2012 -90 +100 cmcm		4054129030703	
	91442 A001	Underframe belluno/bibs 2012 -110 -120cm		4054129030710	
20	820.00041	Castor D=100 steel panel (Tente)		4054129000928	
30	700.00565	Cylinder head screw M 10x20		4054129010934	
40	700.00442	Stop nut M 10		4054129005558	
50	91325 A001	Innerframe- scissor belluno/bibs 2012		4054129030727	
60	890.00120	Groove ball bearing, 6002-ZZ		4054129005053	
70	91326 A001	Outer frame-scissor belluno/bibs 2012		4054129030741	
80	703.00114	Bolt with nut 10/45,8/52		4054129007385	
90	700.00681	Bolt lock SL 10 mm		4054129007392	
100	700.00580	Cylinder head screw 10x80		4054129019227	
110	890.00912	Hexagonal protection cap M10		4054129019210	
120	700.00904	U-washer 18 plastic 19x34x3		4054129019203	
130	700.00472	U- washer 10,5		4054129007736	
140	890.01282	Cover plug 40x30x3 grey		4054129018787	
150	890.01964	Bush bearing MU TFF 10 12 07		4054129019197	
160	800.00522	Lifting motor Limoss		4054129012952	
170	890.01291	Plug 60x40		4054129018855	

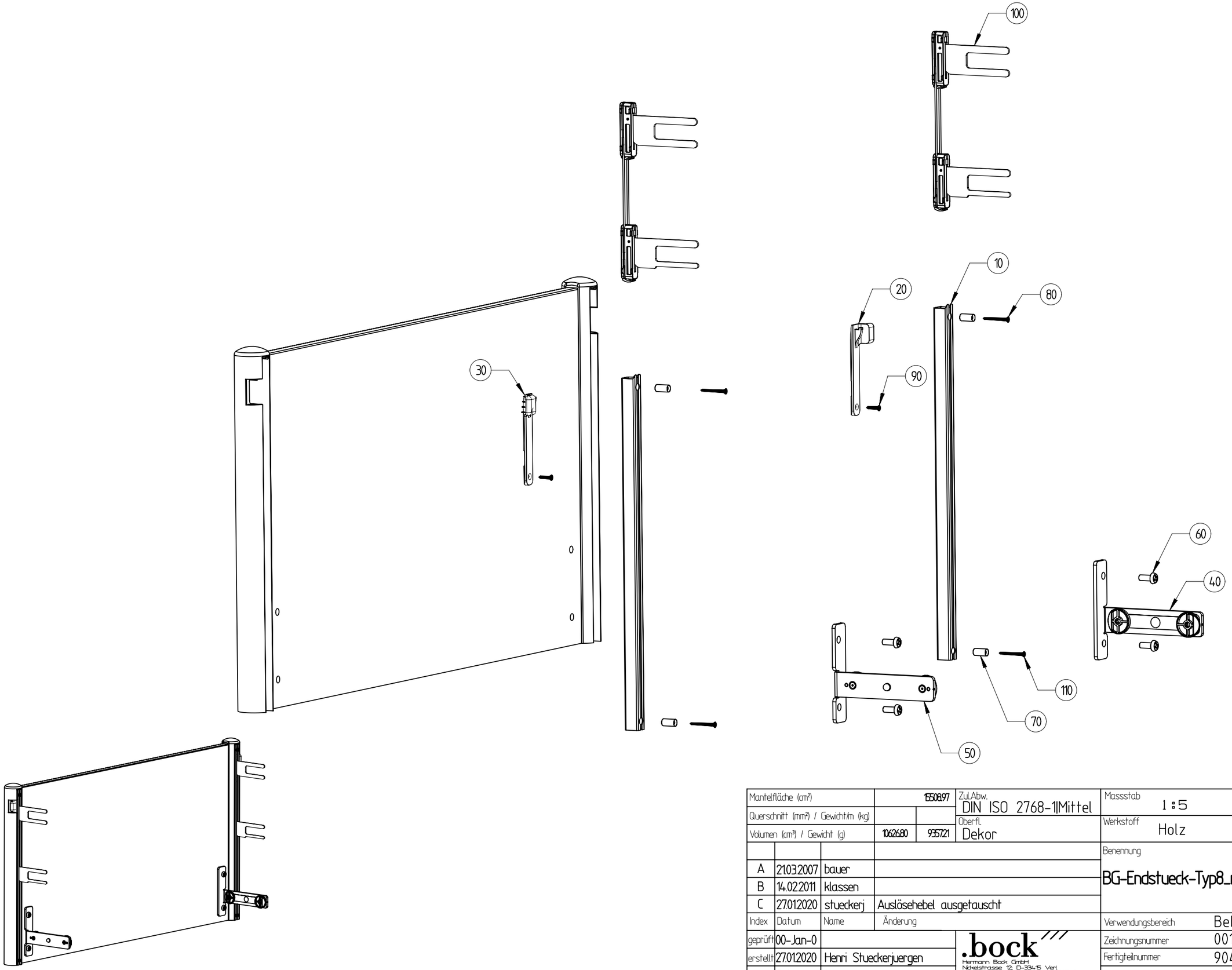

Mantelfläche (cm²)			1550.97	Zul.Abw. DIN ISO 2768-1\Mittel	Massstab 1 : 5 ISO-E
Querschnitt (mm²) / Gewicht/m (kg)				Oberfl. Dekor	Werkstoff Holz
Volumen (cm³) / Gewicht (g)			1062.80 / 935.721		
					Benennung BG-Endstueck-Typ8_neu_m.Beschl.
A	21.03.2007	bauer			
B	14.02.2011	klassen			
C	27.01.2020	stueckerj	Auslösehebel ausgetauscht		In Bearbeitung
Index	Datum	Name	Änderung		Verwendungsbereich Belluno
geprüft	00-Jan-0			.bock /// Hermann Bock GmbH Nikkelstrasse 12, D-33415 Verl www.bock.net fon +049 52469205 0 gm@bock.net fax +049 52469205525	Zeichnungsnummer 001230 C
erstellt	27.01.2020	Henri Stueckerjuergen			Fertigteilnummer 90472
	Datum	Name			Rohteilnummer

A3

No.	Article code	Description	Colour	EAN Codes	
		Set end panel			
10	90456 A001	C-bar 505mm, Type 1, 5 - 8 coated		4054129001925	
20	830.00628	Trip lever for side rail right, alu		4054129045417	
30	830.00629	Trip lever for side rail left, alu		4054129045462	
40	920.04446	Bracket clip-system, left		4054129043499	
50	920.04447	Bracket clip-system, right		4054129022357	
60	700.00970	Fillister head screw M8x16		4054129044489	
70	704.00006	Bush , d= 10x20, di= 5		4054129001956	
80	700.00376	Chipboard screw 4,0 x 40		4054129001932	
90	700.00373	Chipboard screw, 4,0 x 20		4054129001963	
100	920.02706	Side rail fitting, standard, mounted		4054129000249	