Spare part price list 2024

Nursing care bed domiflex

Art.No. 261 A…

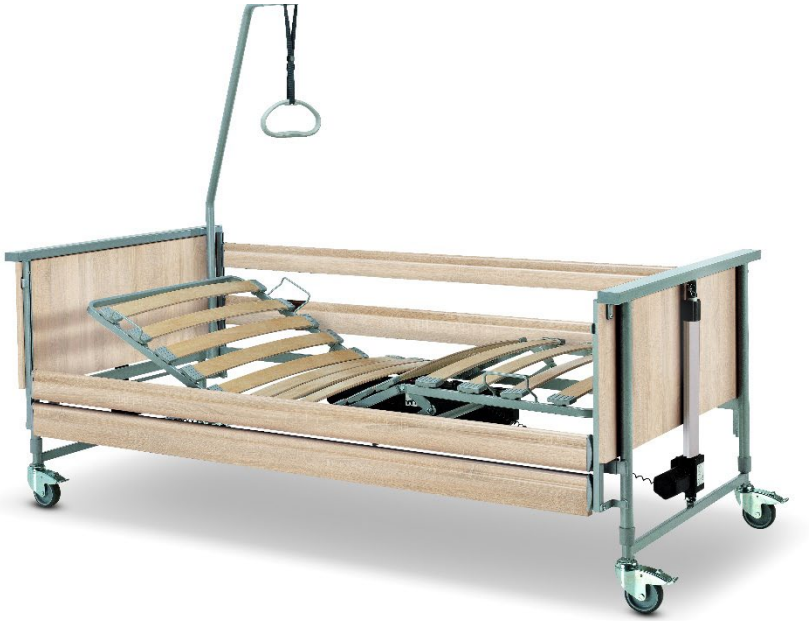

Kindly mention the serial number of the bed on our spare part order.

Subject to technical modification

In case of any future global impacts, we reserve the right to implement further price adjustments in the course of this year.

Prices valid presumably up to the 31.12.2024

Issued: 01/2024

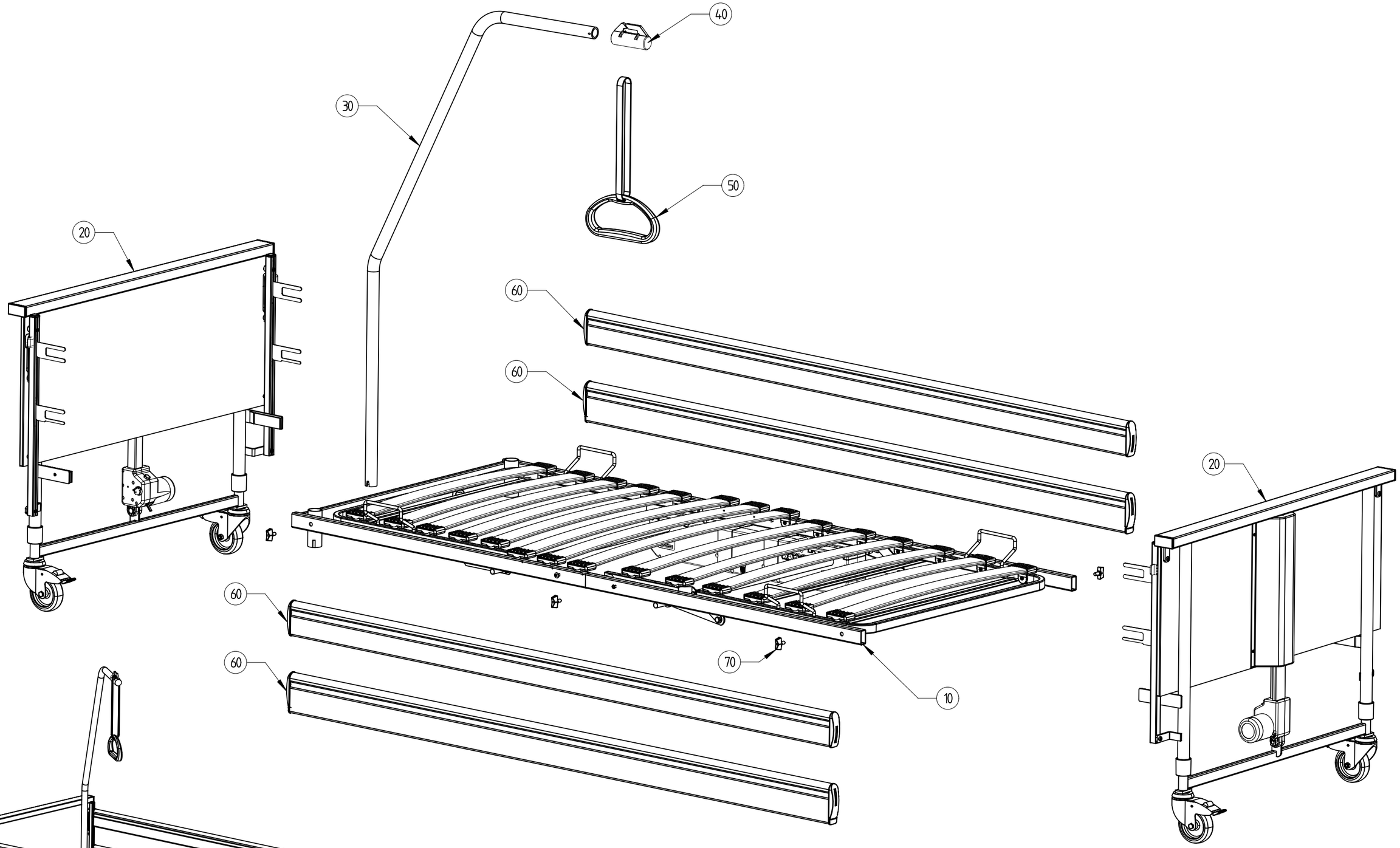

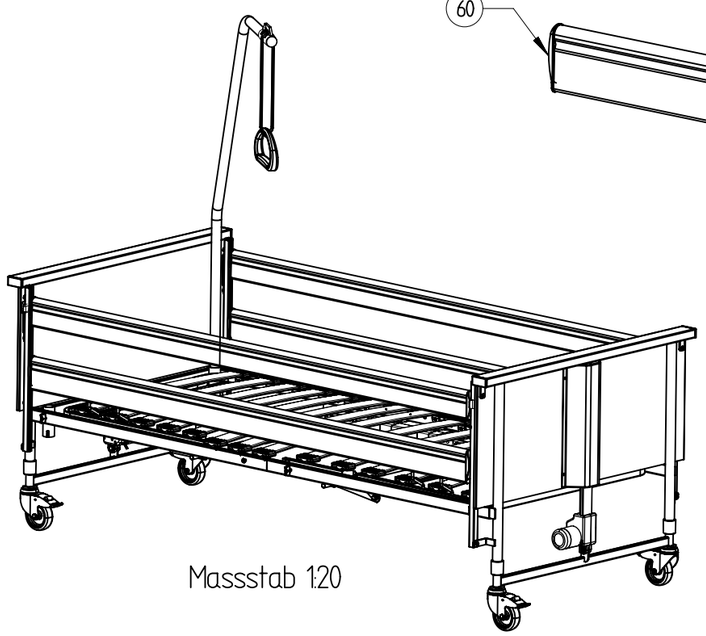

Massstab 1:20

Mantelfläche (cm²)			135894.77		ZulAbw. DIN ISO 2768-1|Mittel	Massstab 1 : 10	ISO-E
Querschnitt (mm²) / Gewicht/m (kg)					Oberfl. Pulverb.	Werkstoff 90x200	
Volumen (cm³) / Gewicht (g)			52687.04	129767.47			
						Benennung BG-Bett-domiflex-Mod.2012	
							In Bearbeitung
A	25.09.2019	brouwers					
Index	Datum	Name	Änderung			Verwendungsbereich	Homecare
geprüft	00-Jan-0				.bock Hermann Bock GmbH Nickelstrasse 12, D-33415 Verl www.bock.net fon +049 52469205 0 gm@bock.net fax +049 5246920525	Zeichnungsnummer	012198 A
erstellt	25.09.2019	Christoph Brouwers				Fertigteilnummer	261
	Datum	Name				Rohteilnummer	

A3

No.	Art.No.	Discription	Colour	EAN Codes	
		Nursing care bed domiflex with mattress compensation			
10	91386 A002	Lying surface domiflex 775-2012 without motor		4054129030659	
20	90161 A036	End panel for domiflex, with motor	Sonoma	4054129058929	
30	92228 A001	Lifting pole with triangle grip		4054129019555	
40	830.00181	Cover cap for lifting pole 38x110		4054129043314	
50	890.01848	Triangle grip for lifting pole, grey		4054129000737	
60	91246 A012	Set wooden side rail domi1/adif. 95/110	Sonoma	4054129058936	
	830.00182	Side rail plug for the upper side rail		4054129001222	
	830.00183	Side rail plug for the lower side rail		4054129043291	
	830.00463	Small cover plug for wooden side rail		4054129004049	
70	890.01478	Butterly screw with plastic handle M8x16		4054129004056	

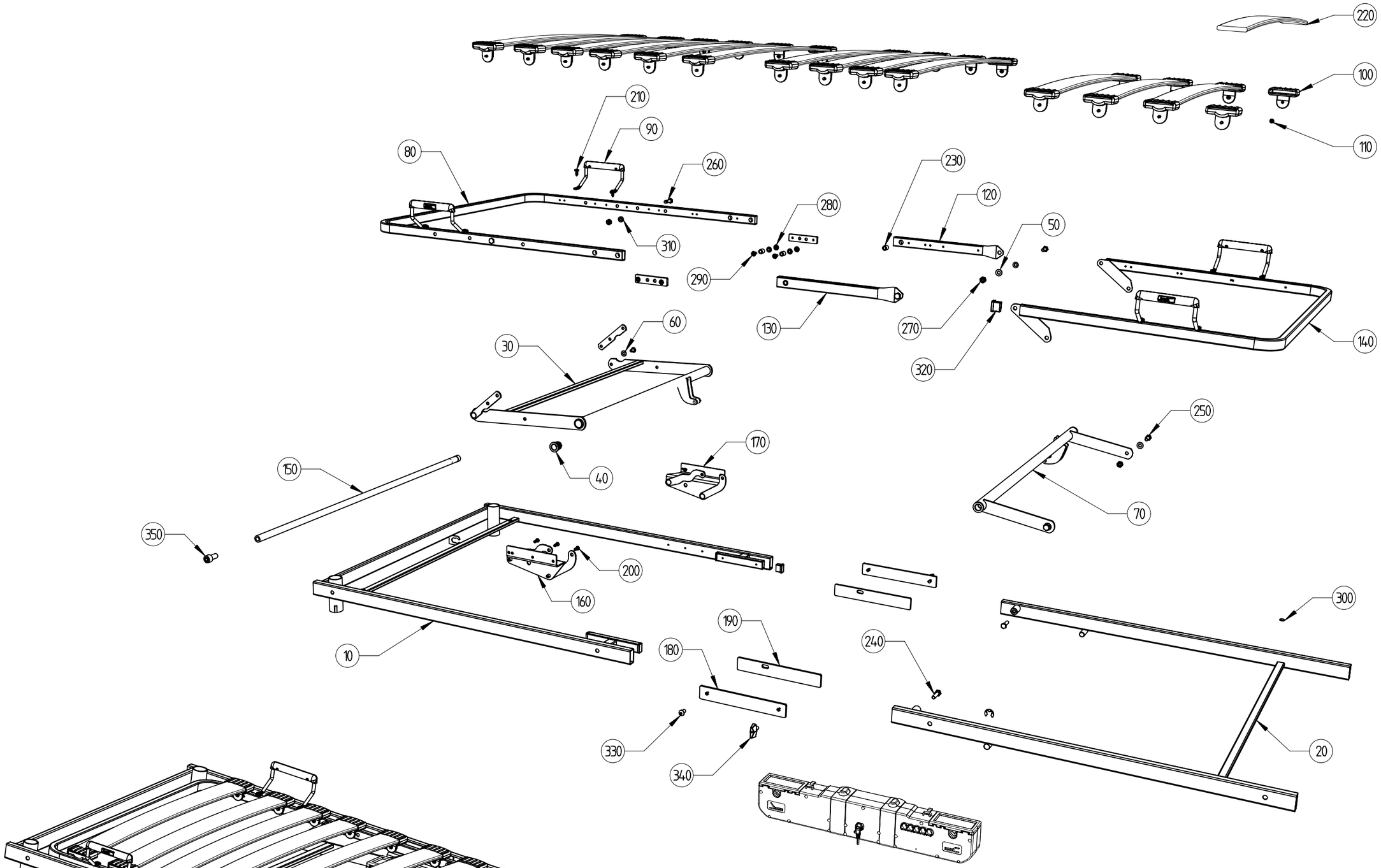

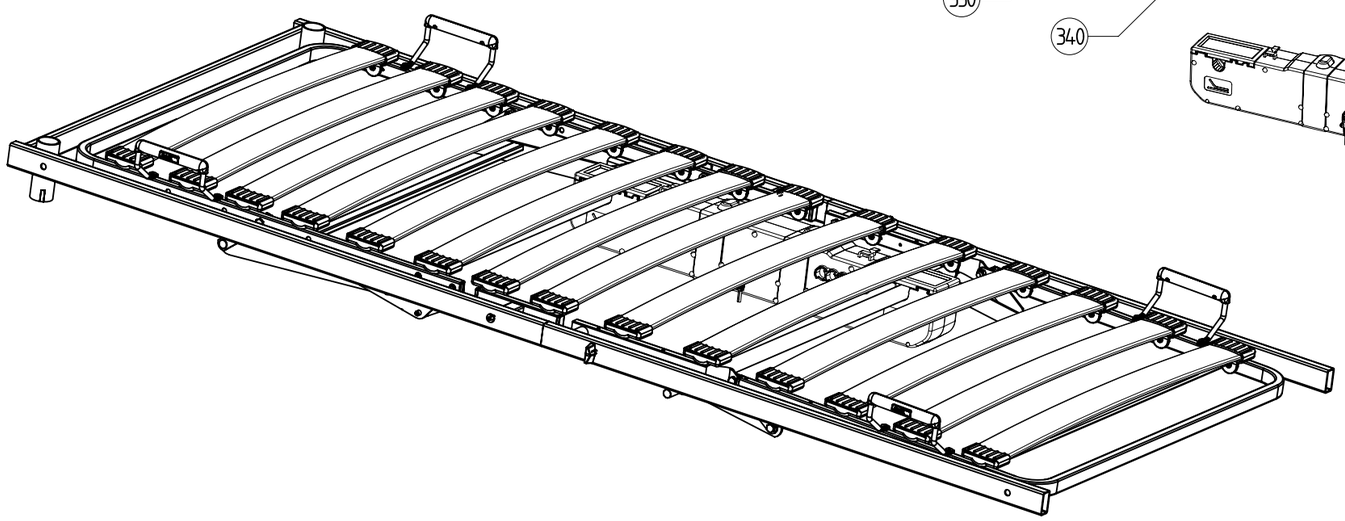

Mantelfläche (cm²)			57029.78	Zul.Abw. DIN ISO 2768-1Mittel	Massstab 1 : 10 ISO-E
Querschnitt (mm²) / Gewicht/m (kg)				Oberfl. Pulverb.	Werkstoff m.Matratzenausgleich
Volumen (cm³) / Gewicht (g)			14897.29 / 67624.35		
					Benennung BG-Liegeflaeche-domiflex.m.MA.2012
A	15.01.2013	bauer			In Bearbeitung
B	28.11.2019	stueckerj			
Index	Datum	Name	Änderung		Verwendungsbereich Domiflex m. MA Mod. 2012
geprüft	00-Jan-0			.bock Hermann Bock GmbH Nickelstrasse 12, D-33415 Verl www.bocknet fon +049 52469205 0 gm@bocknet fax +049 5246920525	Zeichnungsnummer 011957 B
erstellt	28.11.2019	Henri Stueckerjuergen			Fertigteilnummer 91386
	Datum	Name			Rohteilnummer

A3

No.	Art.No.	Discription	Colour	EAN Codes	
		Lying surface			
10	91387 A001	Frame domiflex head part 775 - 2013		4054129029516	
20	92303 A001	Lying surface frame foot part, 2019		4054129030666	
30	91641 A001	Head bar actuator, model 2014, MA		4054129009648	
40	830.00231	Plain bearing bush, with collar		4054129008160	
50	830.00547	Felt washer PP 8,4x17x2		4054129022050	
60	700.00924	Felt washer 15x1mm		4054129043352	
70	91343 A001	Foot bar actuator 2012, pluggable		4054129043352	
80	92116 A001	Head bar 775, dom2		4054129029226	
90	890.02501	Mattress bracket, screwable from above		4054129050008	
100	890.01965	Moulded rubber part, grey		4054129000980	
110	700.00815	Metal screw 4,8x16		4054129017216	
120	92104 A001	Middle part lying surface, right side,ws		4054129032042	
130	92103 A001	Middle part lying surface, left side,ws		4054129030697	
140	90017 A040	Foot bar, perpared for wooden slats		4054129003905	
150	90262 A005	Inner tube actuator for ma		4054129013850	
160	611.00023	Mattress compensation 2015, Left		4054129015021	
170	611.00024	Mattress compensation 2015, Right		4054129015038	
180	910.05970	Connector frame M8, eloflex / domiflex		4054129003752	
190	910.05971	Connector frame, domiflex		4054129003745	
200	700.00977	Sheet metal screw 5,5x16		4054129016561	
210	700.00986	Sheet metal screw 6.3x16		4054129030680	
220	91667 A001	Wooden slat 9mm		4054129011399	
230	609.00017	Bush D=12x15,5		4054129018473	
240	700.00242	Hexagon head screw M 8x30		4054129018480	
250	700.00239	Hexagonal head screw with collar M8x22		4054129028113	
260	700.00660	Pivot screw SW13 8x32(35) M8x10		4054129030673	
270	700.00446	Stop nut M 8		4054129018497	
280	609.00123	Bush with collar 0608-5,5		4054129043369	
290	700.00678	Fillister head screw with collar M6x16		4054129011269	
300	830.00668	Cover plug black		4054129070877	
310	890.00305	Distance piece 8,4x15x5		4054129021268	

320	890.00999	Cover plug 25x15 grey		4054129025228	
330	700.00739	Fillister head screw M8x14, galvanised		4054129000584	
340	890.01478	Butterly screw with plastic handle M8x16		4054129004056	
350	700.00564	Cylinder head screw M 10x16		4054129043239	

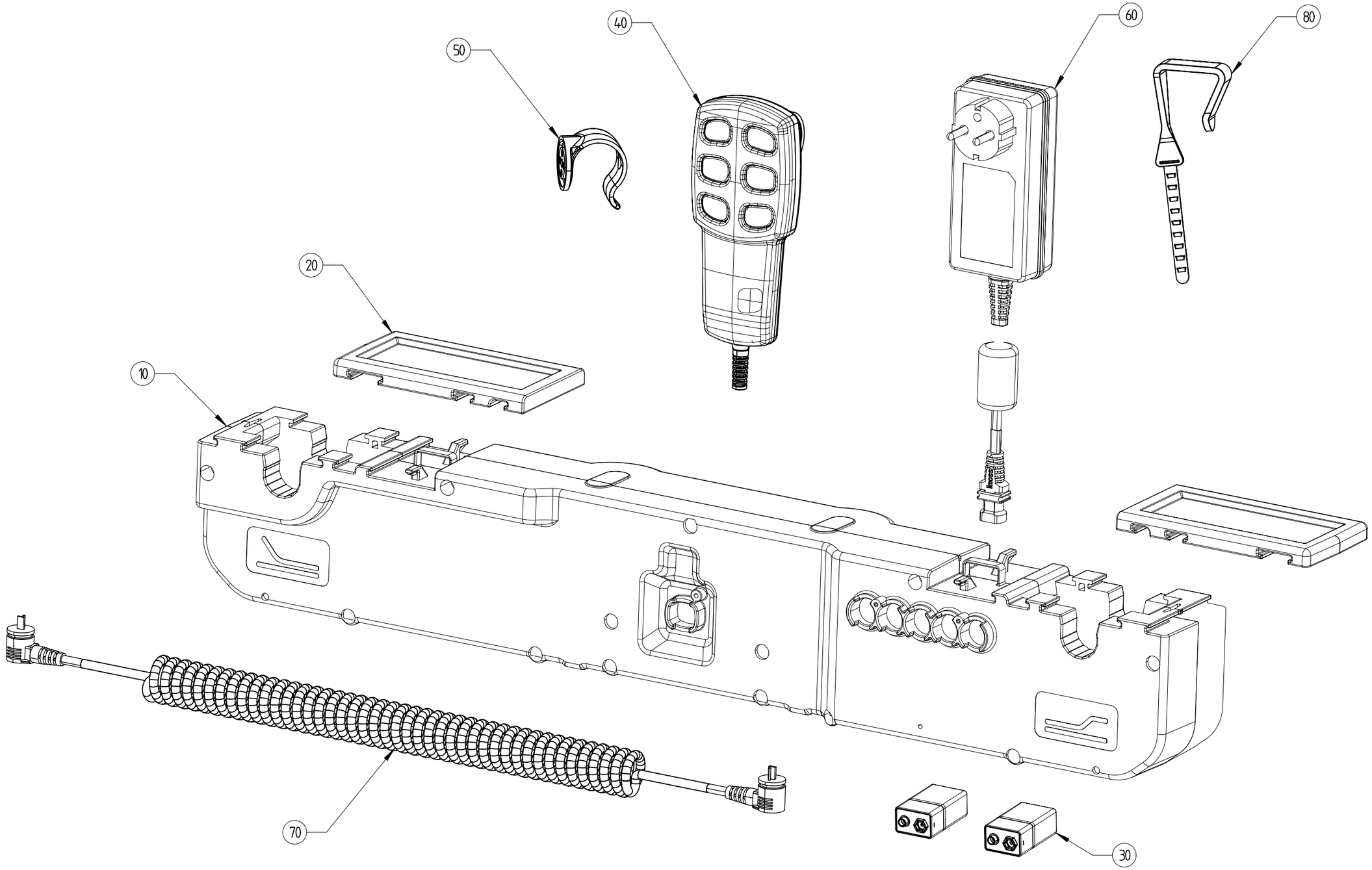

Mantelfläche (cm²)			9410.32		Zul.Abw. DIN ISO 2768-1 Mittel	Massstab 1 : 2 ISO-E
Querschnitt (mm²) / Gewicht/m (kg)					Oberfl. erodiert VDI3400-33	Werkstoff Kunststoff
Volumen (cm³) / Gewicht (g)			434.580	3403.039		
						Benennung Antriebsset-MD201
						In Bearbeitung
A	10.10.2019	brouwers				
Index	Datum	Name	Änderung			Verwendungsbereich Antriebsset Limoss
geprüft					.bock /// Hermann Bock GmbH Nikkelstrasse 12, D-33415 Verl www.bock.net fon +049 52469205 0 gm@bock.net fax +049 52469205525	Zeichnungsnummer 018349 A
erstellt	10.10.2019	Christoph Brouwers				Fertigteilnummer 91871
	Datum	Name				Rohteilnummer

A3

No.	Art.No.	Discription	Colour	EAN Codes	
		Motor set			
10	800.00563	Main motor limoss 2+2 direct, 2014		4054129008061	
20	800.00510	Holding sheet for main motor MD200Limoss		4054129000850	
30	206.00395	Battery 9 Vfor main motor		4054129006920	
40	800.00581	Hand set Bock (limoss) 7 buttons		4054129009013	
50	890.01362	Hand set -clip .bock, silver-grey		4054129001765	
60	800.00454	SMPS plug Euro plug		4054129000867	
70	800.00524	Motor cable MD200/201		4054129011405	
80	800.00099	Net cable attachment		4054129000874	

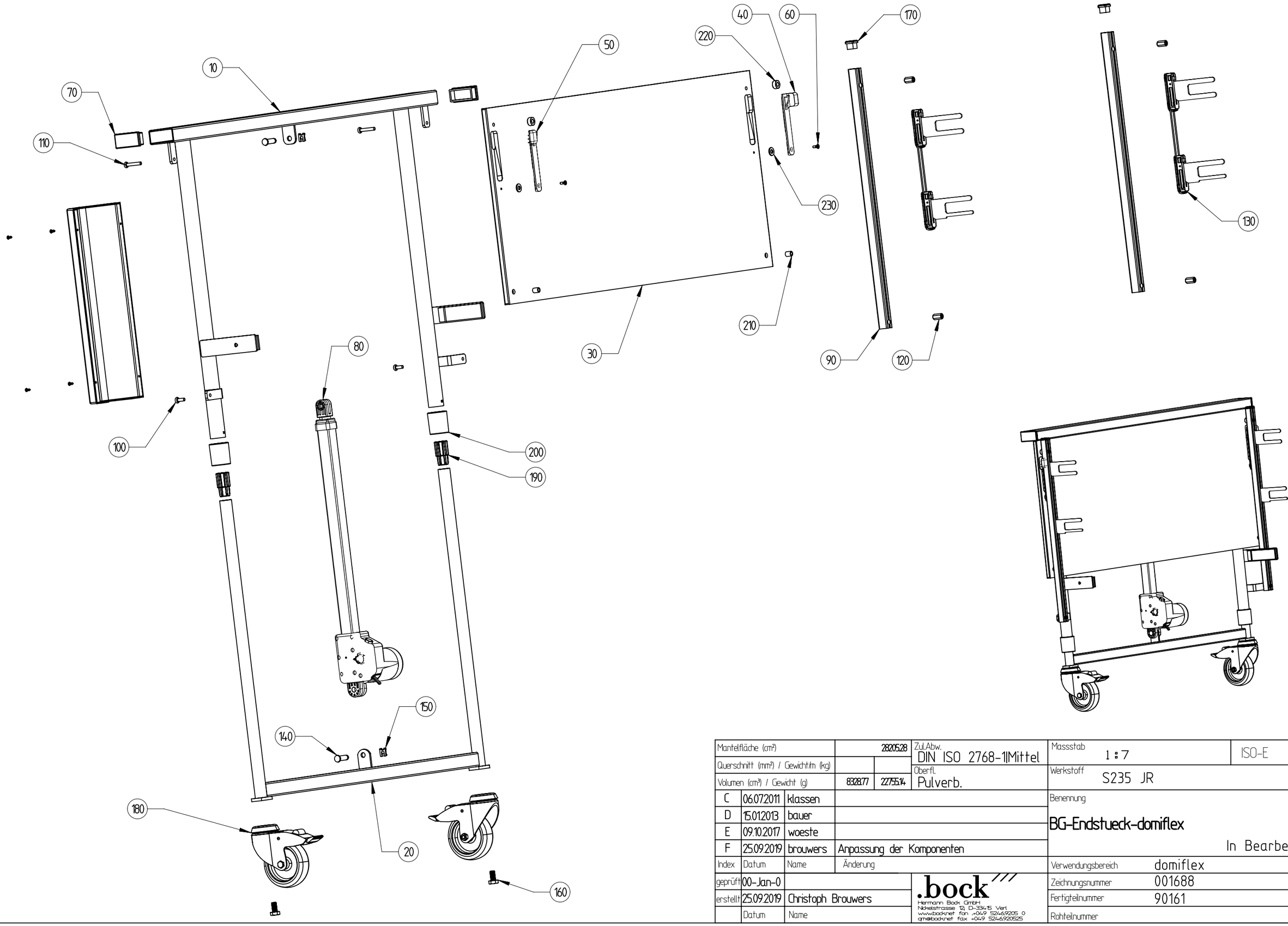

Mantelfläche (cm²)			2820.528	Zul.Abw. DIN ISO 2768-1|Mittel	Massstab 1 : 7	ISO-E
Querschnitt (mm²) / Gewicht/m (kg)				Oberfl. Pulverb.	Werkstoff S235 JR	
Volumen (cm³) / Gewicht (g)			8328.77 / 22755.14			
C	06.07.2011	klassen			Benennung BG-Endstueck-domiflex	
D	15.01.2013	bauer				
E	09.10.2017	woeste				
F	25.09.2019	brouwers	Anpassung der Komponenten		In Bearbeitung	
Index	Datum	Name	Änderung		Verwendungsbereich	domiflex
geprüft	00-Jan-0			.bock /// Hermann Bock GmbH Nickelstrasse 12, D-33415 Verl www.bockhet fon +049 52469205 0 gm@bockhet fax +049 52469205 25	Zeichnungsnummer	001688 F
erstellt	25.09.2019	Christoph Brouwers			Fertigteilnummer	90161
	Datum	Name			Rohteilnummer	

A3

No.	Art.No.	Discription	Colour	EAN Codes	
		End panel			
10	90159 A002	Upper part end panel domiflex h+f		4054129043390	
20	90160 A002	lower part domiflex of end panel		4054129021282	
30	810.00729	Chipboard for end panel domiflex	Sonoma	4054129058943	
40	830.00628	Trip lever for side rail right, alu		4054129045417	
50	830.00629	Trip lever for side rail left, alu		4054129045462	
60	700.00718	Countersunk screw M4x16		4054129022067	
70	890.01177	Cover plug 60x30, grey		4054129006326	
80	800.00477	Lifting motor limoss for end panels		4054129004322	
90	90158 A002	Side rail bar 550 mm, powder coated		4054129007637	
100	700.00169	Filister head screw M 6x16		4054129001567	
110	700.00603	Filister head screw M 6x35		4054129011948	
120	750.00064	Distance piece 6Kt. M 6x20		4054129001574	
130	920.02706	Side rail fitting, standard, mounted		4054129000249	
140	703.00093	Bolt with nut 10/30,8/37		4054129009730	
150	700.00681	Bolt lock SL 10 mm		4054129007392	
160	700.00261	Hexagonal head screw M 10x20		4054129018831	
170	890.01287	Plug 20x20		4054129004032	
180	820.00041	Castor D=100 steel panel (Tente)		4054129000928	
190	830.00320	Plastic bush inside, channel		4054129010958	
200	830.00321	Plastic bush outside, channel		4054129008290	
210	830.00488	Distance piece 8,4x17x8		4054129022036	
220	830.00338	Distance piece 8,4x17x8		4054129022043	
230	830.00547	Felt washer PP 8,4x17x2		4054129022050	